DCbox 5 DIGIT MICROPROCESS PANEL METER (Low Power), 24X48mm

DCMS

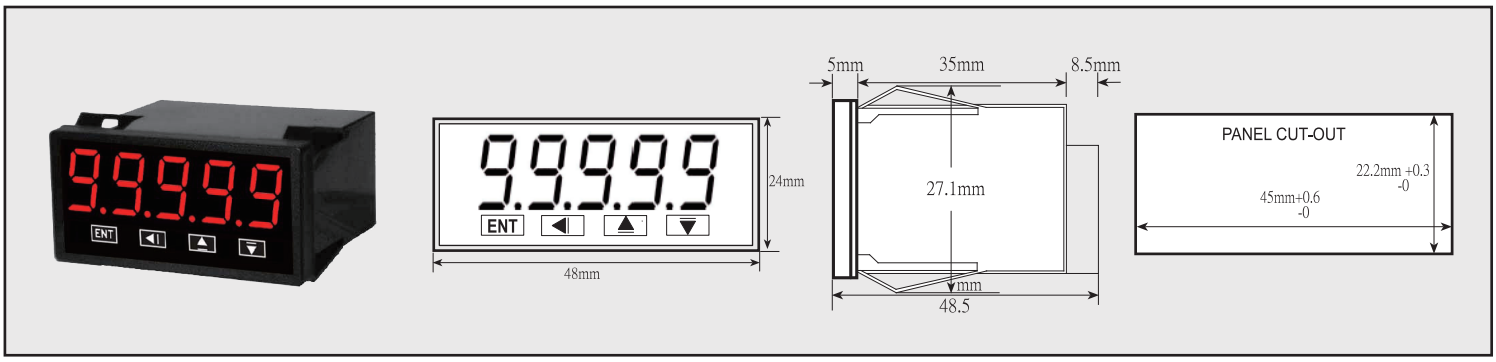

- Accuracy 0.05% F.S.±1digit.
- Measuring DCA/ DCV/ ACA/ ACV/ Potentiometer/ Pt-100/ Thermocouple/ Load Cell/ Resistor/etc...
- Input type J/ K/ T/ E/ R/ S/ B can be modified.
- Programmable rate -19999~99999 digit.
- Decimal point can be modified.
- Dimension small and High stability.

SPECIFICATION

♦ Measuring accuracy: (23±5℃)	0.05% F.S.—1 digit 0.2% F.S.—1 digit(AC(RMS)) 0.2% F.S.—0.5℃(CJC)(Thermocouple)
♦ Sampling time:	20 cycles/sec.
♦ Display average times:	1~99 times adjustable
♦ Readout range:	-19999~99999 digit adjustable
♦ Zero(offset) range:	-999~999 digit adjustable
♦ Span(scale) range:	-999~999 digit adjustable
♦ Over input indication:	"doFL" or "-doFL"
♦ Polarity display:	When input is negative "-" display
♦ Display:	Red high efficiency LEDs high 10.16mm(0.4")
♦ Temp. coefficient:	50ppm/℃(0~50℃)
♦ Parameter setting:	Touch switches
♦ Memory mode:	Flash memory
♦ Dielectric strength:	1.5KVac/1 min.(input/power)(Isolating)
♦ Operating condition:	0~50℃(20 to 90% RH non-condensed)
♦ Storage condition:	0~70℃(20 to 90% RH non-condensed)
♦ Outside dimension:	24x48x48.5mm
♦ Case material:	ABS

WIRING CONNECTION

- **DC,AC,TC,R**

1	2	3	4	5	6
IN (HI)			IN (Lo)	- AUX. POWER	+

- **Potentiometer**

1	2	3	4	5	6
IN (HI)	EXC		IN (Lo)	- AUX. POWER	+

- **Pt-100**

1	2	3	4	5	6
B1	B2		A	- AUX. POWER	+

- **Load Cell**

1	2	3	4	5	6
IN (HI)	EXC	COM	IN (Lo)	- AUX. POWER	+

ORDER INFORMATION

DCMS - [Code 1] [Code 2] [Code 3]

Code1	Input Type	Code2	DCV(ACV)		DCA(ACA)		Potentiometer		Pt-100		Load Cell		Thermocouple	Code3	Aux.Power
A	DC	11	0~50mV	21	0~19.999uA	31	0~10%	51	-50.00~+50.00°C	61	2mV/V	71	J(-200~760)°C	A	DC5V(Non-isolating)
B	AC(RMS)	12	0~5V	22	0~199.99uA	32	0~50%	52	-100.00~+100.00°C	62	3mV/V	72	K(-200~1360)°C	B	DC5V(Isolating)
C	AC(TRMS)	13	0~10V	23	0~1.9999mA	33	0~100%	53	-200.0~+400.0°C	69	SPECIFIED	73	T(-200~395)°C	C	DC10~30V(Non-isolating)
D	Potentiometer	14	0~36V	24	0~19.999mA	34	5~95%	54	-200.0~+850.0C	•61/62 Exciting DC3.3V(<15mA)		74	E(-185~990)°C	D	DC10~30V(Isolating)
F	Pt-100(RTD)	15	0~54V	25	0~199.99mA	35	10~90%	59	SPECIFIED			75	R(0~1760)°C	E	AC/DC20~260V (50/60Hz)(Isolating)
G	Thermocouple	16	0~110V	26	0~2.000A	39	SPECIFIED	•Three wire connection				76	S(0~1750)°C		
H	Load Cell	17	0~600V	27	0~5.000A	•Three wire connection •Exciting voltage DC3.3V(<15mA)						77	B(200~1800)°C	•Less ± 5% for DC input •Less 1VA for input	
R	Resistor	19	SPECIFIED	29	SPECIFIED							•CJC traceability < ±0.5°C(0~70°C)			
O	SPECIFIED														