DCbox 3 PHASE DC MULTIFUNCTION POWER METER GPVA

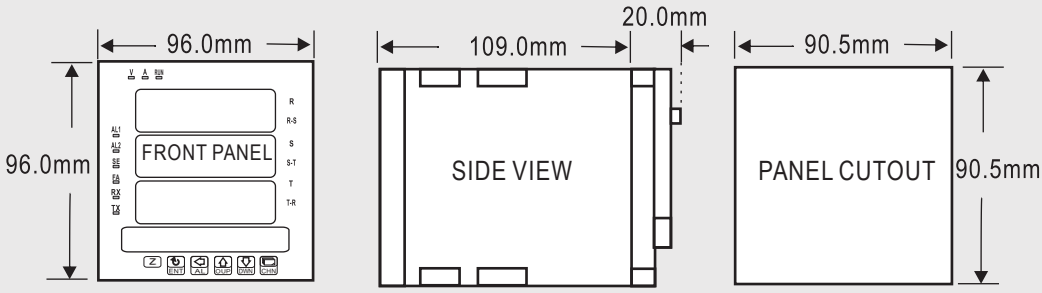

- Measuring DC power parameters: V, A, W, KWH
- 3 input DC Volt / Current available
- Display range: -19999~99999; decimal point selectable
- 2 Alarms output / 2 Pulses output for KWH / RS-485 communication optional (The above option can be exist together)
- DIN case: 96 x 96 mm
- High stability, non-flammable case (PC), high safety

SPECIFICATION

♦ Accuracy:	±0.1% for DCV ±0.1% for DCA ±0.1% for DCKWH
♦ Display Screen:	High brightness LED; 14.22mm (0.56") High brightness LED; 10.2mm (0.4")
♦ Sampling Time:	1 cycle / sec (AVG=1)
♦ Display Range:	-9999~9999 0~999999999 for KWH & KQH
♦ Parameters Setting:	Push buttons
♦ Back Up Memory:	EEPROM
♦ Alarm Action:	"≧(Hi) on" or "< (Lo) on"
♦ Alarm Run Delay Time:	0~99 sec
♦ Relay Contact:	AC 277V / 7A; DC 30V / 7A
♦ Communication:	RS-485 Modbus RTU mode
♦ Baud Rate:	19200 / 9600 / 4800 / 2400 bps
♦ Temperature Coefficient:	100ppm / ℃ (0~60℃)
♦ Operating Temperature:	0~60℃
♦ Operating Humidity:	20~90% RH (non-condensing)
♦ Storage Temperature:	-10~70℃
♦ Storage Humidity:	20~90% RH (non-condensing)
♦ Power Supply:	AC 100~240V; DC 24 / 30~90V
♦ Power Consumption:	10VA (all functions output)
♦ Surge Test:	1KVac / 1min (Input / Power) 3KVac / 1min (Terminals / Case)
♦ Insulation Resistance:	>100MΩ with 500Vdc
♦ Input Impendence:	Voltage: >2V for 20KΩ / V; ≦2V for >200MΩ Current: ≧0.2A at 100mV; <0.2A at 1V
♦ Dimensions:	96(W)*96(H)*129(D) mm
♦ Weight:	About 850 g

WIRING CONNECTION

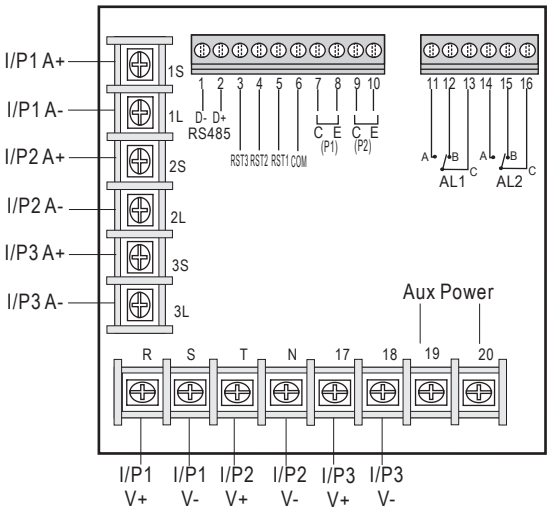

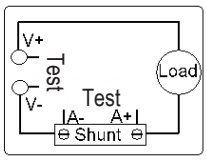

⚠ 50mV shunt must be installed on the negative terminal.

ORDER INFORMATION

GPVA- [Code 1] [Code 2] - [Code 3] - [Code 4] [Code 5] [Code 6]

Code 1	Input Volt
1	0~150V
2	0~300V
3	0~600V
O	Option

Code 2	Input Amp
1	0~50mV
2	0~10V
O	Option

Code 3	Aux. Power
A	AC/DC 100~240V
D	AC/DC 22~60V

Code 4	Alarm Output
N	None
R1	1 Relay
R2	2 Relay

Code 5	Pulse Output
N	None
P1	1 Pulse
P2	2 Pulse

Code 6	RS-485
N	None
Y	Yes