DCbox EXPLOSION-PROOF PRESSURE TRANSMITTER PTA

- Machine building.
- Hydraulics and pneumatics.
- Pumps and compressors.
- Service tasks.
- Measuring ranges from-1~5 to 0~1000bar.
- Accuracy <±0.5% or ±0.25%.
- Can be corrected:
  Output 4~20 mA, DC 0~10 V, DC 0~5 V and others.
- Electrical connection.
- Process connection 1/4" PT and others.

SPECIFICATION

◆ Accuracy	: ±0.5% of F.S. ±0.25% of F.S.
◆ Ambient & Medium	: -10~80℃
◆ Storage	: -40~70℃
◆ Reverse polarity protection	: UB vs. 0V no reverse polarity protection with ratiometric output signal
◆ Insulation voltage	: DC 500 V
◆ Case	: AIS I304 SS
◆ Wetted parts	: AIS I316 SS
◆ Sensor	: Diffusion Silicon
◆ Sensor element	: PH grade steel
◆ Pressure transmission medium	: Synthetic oil
◆ Service life	: 10 million load cycles
◆ Protection	: IP 67
◆ Power Supply	: 12~30Vdc
◆ Control Signal	: 4~20mA, 0~10Vdc, 0~5Vdc, 1~5Vdc
◆ Non-repeatability	: ≤0.1% of span
◆ Signal noise	: ≤0.3% of span
◆ Long-term drift	: ≤0.1% of span

DIMENSION

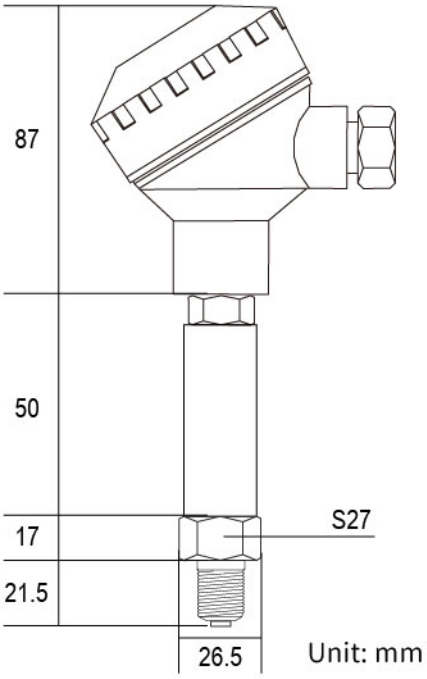

ORDER INFORMATION

PTA - Code1 - Code2 - Code3 - Code4

Code1	Input Range					Code2	Connection	Code3	Output Signal	Code4	Medium
000.1	0.1 bar	010	0~10 bar	400	0~400 bar	S	1/2"PT	A	4~20mA	S	Normal
000.4	0.4 bar	016	0~16 bar	600	0~600 bar	N	1/4"PT	V	0~10Vdc	O	Corrosive
000.6	0.6 bar	025	0~25 bar	1000	0~1000 bar	O	Option	V2	0~5Vdc		
001	0~1 bar	040	0~40 bar	O	Option			V3	1~5Vdc		
002	0~2.5 bar	100	0~100 bar					O	Option		
004	0~4 bar	160	0~160 bar								
006	0~6 bar	250	0~250 bar								