DCbox 5 DIGITS DUAL INPUT & SCREEN(0.4") MICRO-PROCESS METER with 1-2 ALARMS/ ANALOG/ RS-485 (3 Select 1) METER

MA5D

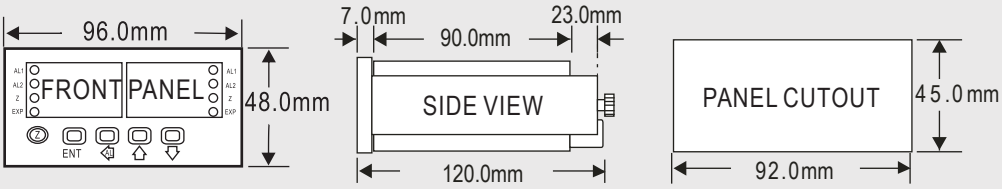

- Accuracy: ±0.1% F.S. ±1 digit (DC)
- Measuring DC Voltage / DC Current individually
- High brightness 0.4" LED display range: -19999~99999; decimal point selectable
- Reset / 1~2 Alarms (Hi or Lo) programmable / Analog output (15 bit resolution) or RS-485 communication optional(3 Select 1)
- High stability, non-flammable case (PC), high safety

SPECIFICATION

♦ Accuracy:	±0.1% F.S. ±1 digit (DC)
♦ Display Screen:	High brightness red LED; 10.16mm(0.4")
♦ Sampling Cycle:	16 cycles / sec (AVG=1)
♦ Display Range:	-19999~99999
♦ Zero Adjustment:	-19999~99999
♦ Over Range Indication:	doFL / ioFL or -doFL / -ioFL
♦ Polarity Indication:	Automatic with "-" indication
♦ Parameters Setting:	Push buttons
♦ Back Up Memory:	EEPROM
♦ Alarm Action:	"≧(Hi) on" or "< (Lo) on"
♦ Alarm Run Delay Time:	0~99 sec
♦ Alarm Hysteresis Range:	0~9999
♦ Relay Contact:	AC 250V / 5A; DC 30V / 7A
♦ Analog Output Resolution:	15 bit
♦ Output Response Time:	<250 msec (0~90%)
♦ Output Capability:	Voltage Output: <20mA Current Output: <10V
♦ Communication:	RS-485 Modbus RTU mode
♦ Baud Rate:	38400 / 19200 / 9600 / 4800 / 2400bps
♦ Parity Check:	n.8.2. / n.8.1. / odd / even
♦ Temperature Coefficient:	100ppm / ℃ (0~60℃)
♦ Operating Temperature:	0~60℃
♦ Operating Humidity:	20~90% RH (non-condensing)
♦ Storage Temperature:	-10~70℃
♦ Storage Humidity:	20~90% RH (non-condensing)
♦ Power Supply:	AC/DC 100~240V; DC 9~30V
♦ Power Consumption:	6.5VA (all functions output)
♦ Surge Test:	2KVac / 1min (Input / Power)
♦ Input Impendence:	Voltage: >2V for 20KΩ / V; ≦2V for >200MΩ Current: ≧0.2A at 100mV; <0.2A at 1V
♦ Dimensions:	96(W)*48(H)*110(D) mm
♦ Weight:	About 500 g

WIRING CONNECTION

Input

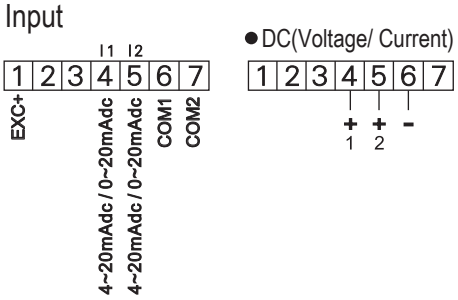

Output

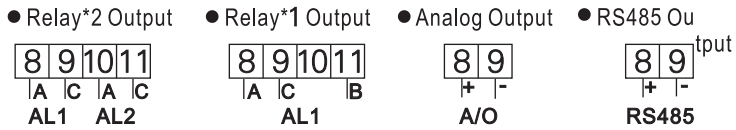

Power

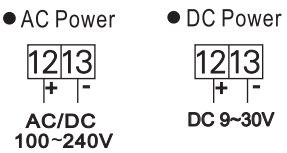

ORDER INFORMATION

MA5D- [Code 1] - [Code 2] [Code 3] - [Code 4] - [Code 5] [Code 6] [Code 7]

Code1	Input Type
D	DC
A	AC

Code2	I/P 1
1	0~50mV
2	0~10V
3	0~36V
4	0~300V
5	0~600V
6	0~20mA
7	4~20mA
8	0~2A
9	0~5A
O	Option

Code3	I/P 2
1	0~50mV
2	0~10V
6	0~20mA
7	4~20mA
8	0~2A
9	0~5A
O	Option

Code 4	Aux. Power
A	AC/DC 100~240V
C	DC 9~30V

3 Select1

Code 5	I/P Alarm
N	None
R1	1 Relay
R2	2 Relays
3	1 Open Collect
4	2 Open Collect

Code6	Analog O/P
N	None
A	4~20 mA
V	0~10V
O	Option

Code 7	RS-485
N	None
Y	Yes